17058PP

MATERIAL: GRADE 8 PER SAE J429 OR EQUIVALENT.

HARDNESS: QUENCH AND TEMPER TO 33-39 HRC.

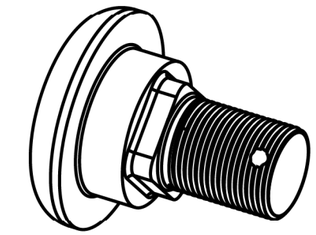

SCALE 1/2

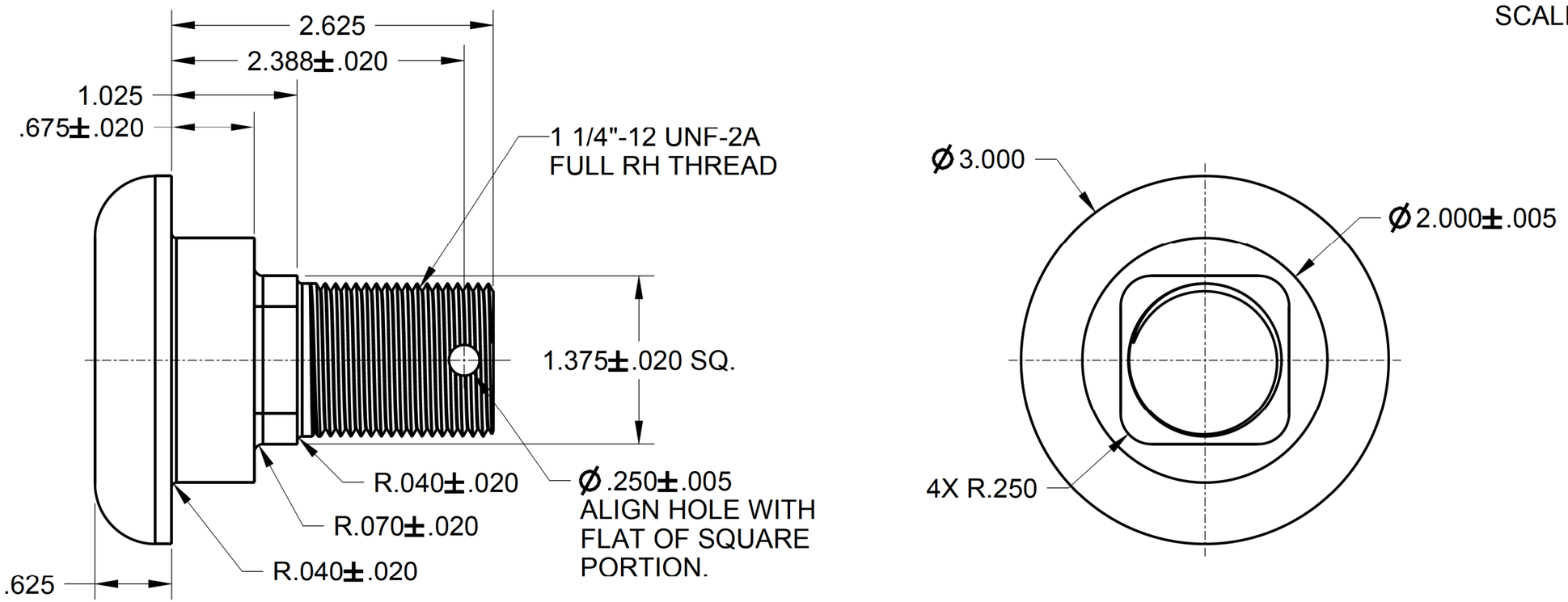

TOLERANCES unless specified	DRAWN BY SRW
FRACTIONS ± 1/16 2-PLC. DEC ± .06 3-PLC. DEC ± .030 ANGLES ± 1°	CHECKED BY APPROVED BY DATE 06/10/25
MATERIAL: SEE NOTE	TITLE: BLADE BOLT 1 1/4" X 2 5/8"
SCALE: 1/1 WEIGHT: 2.4 SHEET 1 OF 1	B PART NO. 17058PP

NO.	DATE	REVISION	BY